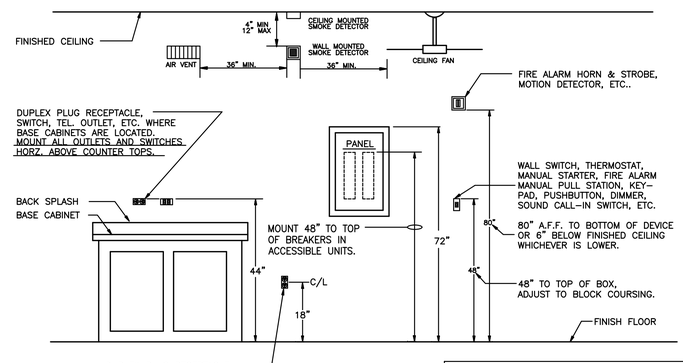

NOTE:
THE DIMENSIONS SHOWN ON THIS DETAIL ARE CRITICAL AND CORRESPOND TO THE LATEST ADA & CODE REQUIREMENTS. DO NOT REVISE THESE DIMENSIONS UNLESS APPROVED PRIOR TO INSTALLATION BY THE ENGINEER.

TYPICAL DEVICE MOUNTING DETAIL

SCALE : NONE ID-02

NOTE:
THIS MATERIAL WAS EXTRACTED BY 3M FIRE PROTECTION PRODUCTS FROM THE 2002 EDITION OF THE UL FIRE RESISTANCE DIRECTORY

SYSTEM NO. W-L-5001

(FORMERLY SYSTEM NO. 147)
F-RATINGS – 1 AND 2 HR (SEE ITEM 1)
T-RATINGS – 3/4, 1 AND 1-1/2 HR (SEE ITEM 3)
L-RATING AT AMBIENT – 2 CFM/sq ft
L-RATING AT 400 F – LESS THAN 1 CFM/sq ft

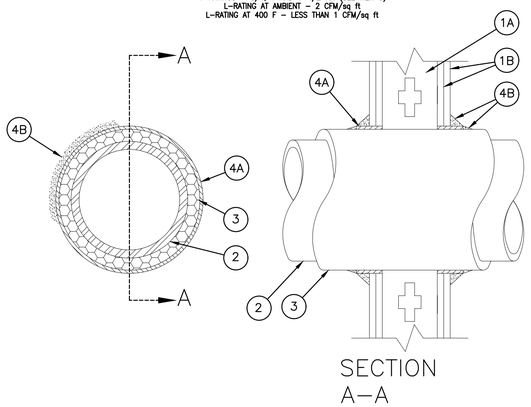

1. Wall Assembly – The 1 or 2 hr fire-rated gypsum wallboard/stud wall assembly shall be constructed of the materials and in the manner described in the individual U300 or U400 Series Wall or Partition Design in the UL Fire Resistance Directory and shall include the following construction features:
A. Studs – Wall framing may consist of either wood studs or steel channel studs. Wood studs to consist of nom 2 by 4 in. lumber spaced 16 in. OC with nom 2 by 4 in. lumber end plates and cross braces. Steel studs to be min 3-5/8 in. wide by 1-3/8 in. deep channels spaced max 24 in. OC.
B. Gypsum Board* – Nom 5/8 in. thick, 4 ft wide with square or tapered edges. The gypsum wallboard type, thickness, number of layers, fastener type and sheet orientation shall be as specified in the individual U300 or U400 Series Design in the UL Fire Resistance Directory. Max diam of opening is 14-1/2 in for wood stud walls and 18 in. for steel stud walls.
The hourly F Rating of the firestop system is 1 hr when installed in a 1 hr fire rated wall and 2 hr when installed in a 2hr fire rated wall.
2. Through Penetrants – One metallic pipe or tubing to be centered within the firestop system. Pipe or tubing to be rigidly supported on both sides of wall assembly. The following types and sizes of metallic pipes or tubing may be used:
A. Steel Pipe – Nom 12 in. diam (or smaller) Schedule 10 (or heavier) steel pipe.
B. Copper Tubing – Nom 6 in. diam (or smaller) Type L (or heavier) copper tubing.
C. Copper Pipe – Nom 6 in. diam (or smaller) Regular (or heavier) copper pipe.
3. Pipe Covering* – Nom 1 or 2 in. thick hollow cylindrical heavy density (min 3.5 pcf) glass fiber units jacketed on the outside with an all service jacket. Longitudinal joints sealed with metal fasteners or factory-applied self-sealing lap tape. Transverse joints sealed with metal fasteners or with butt strip tape supplied with the product.
When nom 1 in. thick pipe covering is used, the annular space between the pipe covering and the circular cutout in the gypsum wallboard layers on each side of the wall shall be min 1/4 in. to max 3/8 in. When nom 2 in. thick pipe covering is used, the annular space between the pipe covering and the circular cutout in the gypsum wallboard layers on each side of the wall shall be min 1/2 in. to max 3/4 in.
See Pipe and Equipment Covering – Materials (BRGU) category in Building Materials Directory for names of manufacturers. Any pipe covering material meeting the above specifications and bearing the UL Classification Marking with a Flame Spread Index of 25 or less and a Smoke Developed Index of 50 or less may be used.
The hourly T Rating of the firestop system is 3/4 hr when nom 1 in. thick pipe covering is used.The hourly T Rating of the firestop system is 1 hr and 1-1/2 hr when nom 2 in. thick pipe covering is used with 1 hr and 2 hr fire rated walls, respectively.
4. Firestop System – Installed symmetrically on both sides of wall assembly. The details of the firestop system shall be as follows:
A. Fill,Void or Cavity Materials* – Wrap Strip – Nom 1/4 in. thick intumescent elastomeric material faced on one side with aluminum foil, supplied in 2 in. wide strips. Nom 2 in. wide strip tightly wrapped around pipe covering (foil side out) with seam butted. Wrap strip layer securely bound with steel wire or aluminum foil tape and slid into annular space approx 1-1/4 in. such that approx 3/4 in. of the wrap strip width protrudes from the wall surface. One layer of wrap strip is required when nom 1 in. thick pipe covering is used. Two layers of wrap strip are required when nom 2 in. thick pipe covering is used.
MINNESOTA MINING & MFG CO – FS-195+
B. Fill,Void or Cavity Materials* – Caulk – Min 1/4 in. diam continuous bead applied to the wrap strip/wall interface and to the exposed edge of the wrap strip layer approx 3/4 in. from the wall surface.
MINNESOTA MINING & MFG CO – CP 25WB+.
*Bearing the UL Classification Marking

CONSULT CURRENT UNDERWRITERS LABORATORIES "FIRE RESISTANCE DIRECTORY" FOR DETAILS.

All statements, technical information and recommendations contained herein are based on tests we believe to be reliable, however, since the conditions of use and application are beyond our control, 3M shall not be liable for any damage, direct or consequential, resulting from the use of this material or design. 3M's only warranty shall be to replace any of our products proved to be defective.

3M Fire Protection Products

PAGE	UL SYSTEM NO.
1 OF 1	WL-5001

NOT FOR USE AS A CONSTRUCTION DOCUMENT. DRAWING NOT TO SCALE.

PANEL "C"

120/240 VOLTS, 1-PHASE, 3-WIRE, 1 LUG / PHASE — 200A MAIN BREAKER

POLE NO.	BKR. NO.	TRIP AMP.	BKR. POLE	SERVES	LOAD V. A. A-PH.	LOAD V. A. B-PH.	POLE NO.	BKR. NO.	TRIP AMP.	BKR. POLE	SERVES
1	1	20	1	EXTERIOR LIGHTS (PC)	700		2	2	20	1	SERVICE PLUG
					1000						
3	3	20	1	LIGHTS		600	4	4	20	1	SERVICE PLUG
						1000					
5	5	30		HP-2 (*)	2880		6	6	30		HP-2 (*)
					2880						
7	7		2			2880	8	8		2	
						2880					
9	9	45		AHU-2(*)	4320		10	10	45		AHU-2(*)
					4320						
11	11		2			4320	12	12		2	
						4320					
13	13	--	--	PROVISIONS	----		14	14	--	--	PROVISIONS

15	15	--	--	PROVISIONS		----	16	16	--	--	PROVISIONS

17	17	--	--	PROVISIONS	----		18	18	--	--	PROVISIONS

19	19	--	--	PROVISIONS		----	20	20	--	--	PROVISIONS

21	21	--	--	PROVISIONS	----		22	22	--	--	PROVISIONS

23	23	--	--	PROVISIONS		----	24	24	--	--	PROVISIONS

25	25	--	--	PROVISIONS	----		26	26	--	--	PROVISIONS

27	27	--	--	PROVISIONS		----	28	28	--	--	PROVISIONS

29	29	--	--	PROVISIONS	----		30	30	--	--	PROVISIONS

FLUSH MTD. ___				CONNECTED V. A. / PHASE	16,100	16,000	"A.I.C." RATING: 22,000 AMPS.				NOTES: 1,2,4,5,7,8, NEMA 3R PROVIDE 20/1 RELAY TO CONTROL CKT. 1 VIA PC.
SURFACE MTD. X				CONNECTED AMP. / PHASE	134.2	133.3					

PANEL "D"

120/240 VOLTS, 1-PHASE, 3-WIRE, 1 LUG / PHASE — 200A MAIN BREAKER

POLE NO.	BKR. NO.	TRIP AMP.	BKR. POLE	SERVES	LOAD V. A. A-PH.	LOAD V. A. B-PH.	POLE NO.	BKR. NO.	TRIP AMP.	BKR. POLE	SERVES
1	1	20	1	EXTERIOR LIGHTS (PC)	700		2	2	20	1	SERVICE PLUG
					200						
3	3	20	1	LIGHTS		600	4	4	20	1	SERVICE PLUG
						200					
5	5	25		HP-3 (*)	2400		6	6	25		HP-3 (*)
					2400						
7	7		2			2400	8	8		2	
						2400					
9	9	40		AHU-3(*)	3840		10	10	40		AHU-3(*)
					3840						
11	11		2			3840	12	12		2	
						3840					
13	13	--	--	PROVISIONS	----		14	14	--	--	PROVISIONS

15	15	--	--	PROVISIONS		----	16	16	--	--	PROVISIONS

17	17	--	--	PROVISIONS	----		18	18	--	--	PROVISIONS

19	19	--	--	PROVISIONS		----	20	20	--	--	PROVISIONS

21	21	--	--	PROVISIONS	----		22	22	--	--	PROVISIONS

23	23	--	--	PROVISIONS		----	24	24	--	--	PROVISIONS

25	25	--	--	PROVISIONS	----		26	26	--	--	PROVISIONS

27	27	--	--	PROVISIONS		----	28	28	--	--	PROVISIONS

29	29	--	--	PROVISIONS	----		30	30	--	--	PROVISIONS

FLUSH MTD. ___				CONNECTED V. A. / PHASE	23,580	22,880	"A.I.C." RATING: 22,000 AMPS.				NOTES: 1,2,4,5,7,8, NEMA 3R PROVIDE 20/1 RELAY TO CONTROL CKT. 1 VIA PC.
SURFACE MTD. X				CONNECTED AMP. / PHASE	196.5	190.7					

PANEL "E"

120/240 VOLTS, 1-PHASE, 3-WIRE, 1 LUG / PHASE — 100A MAIN BREAKER

POLE NO.	BKR. NO.	TRIP AMP.	BKR. POLE	SERVES	LOAD V. A. A-PH.	LOAD V. A. B-PH.	POLE NO.	BKR. NO.	TRIP AMP.	BKR. POLE	SERVES
1	1	20	1	EXTERIOR LIGHTS (PC)	200		2	2	20	1	ACCESS GATE
					1000						
3	3	20	1	LIGHTS		600	4	4	20	1	PLUG
						1500					
5	5	20	1	PLUG	1500		6	6	20	1	PLUG
					1500						
7	7	20	1	PLUG		1500	8	8	20	1	PLUG
						1500					
9	9	20	1	PLUG	1500		10	10	20	1	PLUG
					1500						
11	11	20	1	PLUG		1500	12	12	20	1	PLUG
						1500					
13	13	20	1	PLUG	1500		14	14	20	1	PLUG
					1500						
15	15	20	1	PLUG		1500	16	16	20	1	SERVICE PLUG
						200					
17	17	--	--	PROVISIONS	----		18	18	--	--	PROVISIONS

19	19	--	--	PROVISIONS		----	20	20	--	--	PROVISIONS

21	21	--	--	PROVISIONS	----		22	22	--	--	PROVISIONS

23	23	--	--	PROVISIONS		----	24	24	--	--	PROVISIONS

25	25	--	--	PROVISIONS	----		26	26	--	--	PROVISIONS

27	27	--	--	PROVISIONS		----	28	28	--	--	PROVISIONS

29	29	--	--	PROVISIONS	----		30	30	--	--	PROVISIONS

FLUSH MTD. ___				CONNECTED V. A. / PHASE	10,200	9,600	"A.I.C." RATING: 22,000 AMPS.				NOTES: 1,2,4,5,7,8, NEMA 3R PROVIDE 20/1 RELAY TO CONTROL CKT. 1 VIA PC.
SURFACE MTD. X				CONNECTED AMP. / PHASE	85.0	80.0					

NOTES:

1. NO 120 VOLT CIRCUITS SHALL HAVE "SHARED NEUTRAL" CONNECTIONS UNLESS APPROVED BY ENGINEER. IF APPROVED, SHARED NEUTRAL CIRCUITS SHALL COMPLY WITH NEC ARTICLE 210.4. HOWEVER, SHARED NEUTRAL CONNECTIONS MAY NOT BE COMPATIBLE WITH ALL EQUIPMENT.
2. (*) TRIP AMPS SHOWN FOR AIR CONDITIONING EQUIPMENT SHALL BE APPROXIMATE ONLY. CONTRACTOR SHALL VERIFY & SIZE BREAKER/FUSES IN ACCORDANCE WITH EQUIPMENT MANUFACTURER'S LABEL IN ACCORDANCE WITH NEC ARTICLE 430 & 440. ALL AIR CONDITIONING EQUIPMENT BREAKERS SHALL BE "HACR" TYPE.
3. ALL 120 VOLT, SINGLE PHASE, 15 & 20 AMPERE BRANCH CIRCUITS SUPPLYING OUTLETS INSTALLED IN DWELLING UNITS & DORMITORY UNITS & GUEST ROOMS, GUEST SUITES, AND PATIENT SLEEPING ROOMS IN NURSING HOMES AND LIMITED CARE FACILITIES SHALL BE PROTECTED BY A LISTED ARC-FAULT CIRCUIT INTERRUPTER, COMBINATION TYPE, INSTALLED TO PROVIDE PROTECTION OF THE BRANCH CIRCUIT. (NEC ARTICLE 210.12, 2020 EDITION).
4. (AFCI) INDICATES ARC FAULT CIRCUIT INTERRUPTER TYPE BREAKER; (GFCI) INDICATES GROUND FAULT CIRCUIT INTERRUPTER TYPE BREAKER; (ST) INDICATES SHUNT TRIP TYPE BREAKER.
5. (PC) INDICATES PHOTOCELL CONTROLLED CIRCUIT; (TS) INDICATES TIMESWITCH CONTROLLED CIRCUIT; (PC+TS) INDICATES PHOTOCELL AND TIMECLOCK CONTROLLED CIRCUIT.
6. (FA) INDICATES CIRCUIT BREAKER SHALL BE RED IN COLOR, ACCESSIBLE ONLY TO QUALIFIED PERSONNEL AND LABELED FIRE ALARM CIRCUIT.
7. (NEMA 3R) INDICATES NEMA 3R RATED PANELBOARD.
8. ALL PANELBOARDS SHALL HAVE TYPED DIRECTORY AS PER 2017 NATIONAL ELECTRICAL CODE ARTICLE 408.4(A)

PANEL "A"

120/240 VOLTS, 1-PHASE, 3-WIRE, 1 LUG / PHASE — 100A MAIN BREAKER

POLE NO.	BKR. NO.	TRIP AMP.	BKR. POLE	SERVES	LOAD V. A. A-PH.	LOAD V. A. B-PH.	POLE NO.	BKR. NO.	TRIP AMP.	BKR. POLE	SERVES
1	1	20	1	EXTERIOR LIGHTS (PC)	200		2	2	20	1	SERVICE PLUG
					1500						
3	3	20	1	LIGHTS		400	4	4	20	1	PLUG
						1500					
5	5	20	1	PLUG	1500		6	6	20	1	PLUG
					1500						
7	7	20	1	PLUG		1500	8	8	20	1	PLUG
						1500					
9	9	20	1	PLUG	1500		10	10	20	1	PLUG
					1500						
11	11	20	1	PLUG		1500	12	12	--	--	PROVISIONS

13	13	--	--	PROVISIONS	----		14	14	--	--	PROVISIONS

15	15	--	--	PROVISIONS		----	16	16	--	--	PROVISIONS

17	17	--	--	PROVISIONS	----		18	18	--	--	PROVISIONS

19	19	--	--	PROVISIONS		----	20	20	--	--	PROVISIONS

21	21	--	--	PROVISIONS	----		22	22	--	--	PROVISIONS

23	23	--	--	PROVISIONS		----	24	24	--	--	PROVISIONS

25	25	--	--	PROVISIONS	----		26	26	--	--	PROVISIONS

27	27	--	--	PROVISIONS		----	28	28	--	--	PROVISIONS

29	29	--	--	PROVISIONS	----		30	30	--	--	PROVISIONS

FLUSH MTD. ___				CONNECTED V. A. / PHASE	7700	6400	"A.I.C." RATING: 22,000 AMPS.				NOTES: 1,2,4,5,7,8, NEMA 3R PROVIDE 20/1 RELAY TO CONTROL CKT. 1 VIA PC.
SURFACE MTD. X				CONNECTED AMP. / PHASE	64.2	53.3					

PANEL "B"

120/240 VOLTS, 1-PHASE, 3-WIRE, 1 LUG / PHASE — 400A M.L.O

POLE NO.	BKR. NO.	TRIP AMP.	BKR. POLE	SERVES	LOAD V. A. A-PH.	LOAD V. A. B-PH.	POLE NO.	BKR. NO.	TRIP AMP.	BKR. POLE	SERVES
1	1	20		PARKING LOT LIGHTS (PC)	450		2	2	20	1	ACCESS GATE
					1500						
3	3		2			450	4	4	20	1	LIGHTS
						300					
5	5	20	1	EXTERIOR LIGHTS (PC+TS)	200		6	6	20	1	LIGHTS
					600						
7	7	20	1	SERVICE PLUGS		1000	8	8	20		HP-1 (*)
						1200					
9	9	20	1	TELEPHONE BOARD	1000		10	10		2	
					1200						
11	11	20	1	PLUG/EXHAUST FAN		1000	12	12	30		AHU-1(*)
						2880					
13	13	20		DMS MINI-SPLIT C.U. (*)	1300		14	14		2	
					2880						
15	15		2			1300	16	16	20		HP-1 (*)
						1200					
17	17	40	1	WATER HEATER	3500		18	18		2	
					1200						
19	19	--	--	PROVISIONS		----	20	20	30		AHU-1 (*)
						2880					
21	21	--	--	PROVISIONS	----		22	22		2	
					2880						
23	23	--	--	PROVISIONS		----	24	24	--	--	PROVISIONS

25	25	--	--	PROVISIONS	----		26	26	--	--	PROVISIONS

27	27	100		PANEL "A"		6400	28	28	--	--	PROVISIONS

29	29		2		7700		30	30	--	--	PROVISIONS

FLUSH MTD. ___				CONNECTED V. A. / PHASE	24,410	18,610	"A.I.C." RATING: 22,000 AMPS.				NOTES: 1,2,4,5,7,8, NEMA 3R PROVIDE 20/2 RELAY TO CONTROL CKT. 1/3 VIA PC. PROVIDE 20/2 RELAY TO CONTROL CKT. 5 VIA PC & TS.
SURFACE MTD. X				CONNECTED AMP. / PHASE	203.4	155.1					

NORRIS & ASSOCIATES ENGINEERS INC.
5518 WALLWOOD ROAD
KNOXVILLE, TN 37912
PHONE: 865-584-3063
FAX: 865-584-3065
www.norrisengineers.com

THIS DRAWING IS GENERALLY DIAGRAMMATIC AND EXCEPT WHERE SPECIFICALLY DIMENSIONED OR DETAILED, INDICATES THE GENERAL ARRANGEMENT OF THE WORK. THE CONTRACTOR SHALL INSTALL HIS WORK TO CONFORM AS NEARLY AS POSSIBLE TO THE LOCATIONS AND ARRANGEMENTS SHOWN. COORDINATE THE WORK WITH ALL OTHER TRADES TO AVOID INTERFERENCES.

THIS DRAWING AND IT'S CONTENTS ARE THE PROPERTY OF NORRIS & ASSOCIATES ENGINEERS INC. AND SHALL NOT BE REPRODUCED IN WHOLE OR IN PART WITHOUT THE EXPRESS WRITTEN AUTHORIZATION OF NORRIS & ASSOCIATES ENGINEERS INC.

STORAGE FACILITY
DEVELOPMENT
305 WEST ECONOMY ROAD
MORRISTOWN, TN. 37814
MR. BARAK ZUKERMAN
23025

KEVIN E. NORRIS
REGISTERED ENGINEER
No. 105758
STATE OF TENNESSEE
1/5/24

R. LEN JOHNSON & ASSOCIATES
Architects, Construction Analysts & Inspectors
724 TAYLOR ROAD, KNOXVILLE, TN 37920 (VOL) 573-1148

Drawing Description.....
SCHEDULES & DETAILS

REVISIONS

No.	Date

Plot Scale	NONE
Drn.	KN
Appd.	KN
Project No.	23046
Date	5 JAN 24
Sh. No.	
of	

E3.2