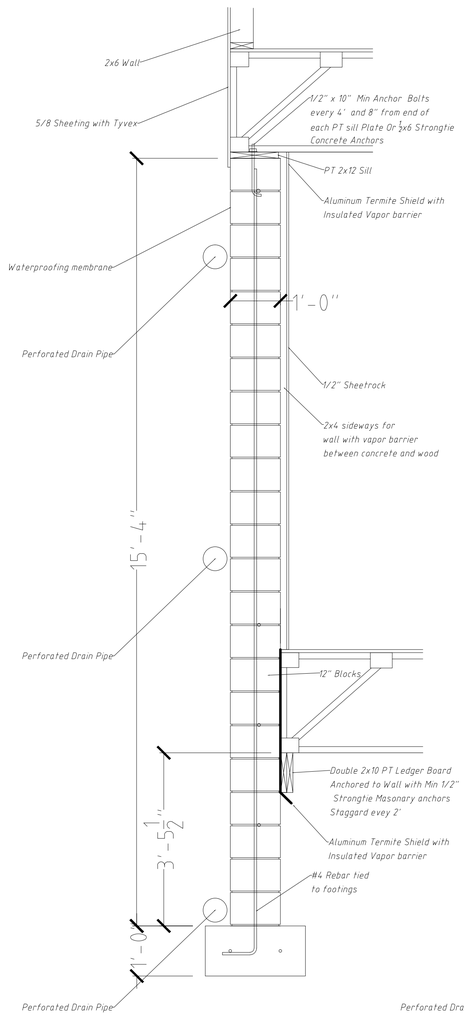

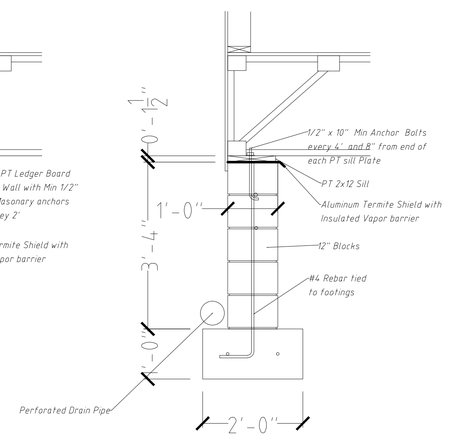

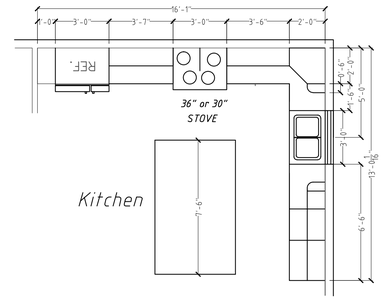

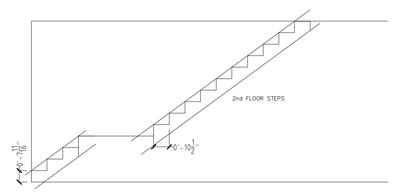

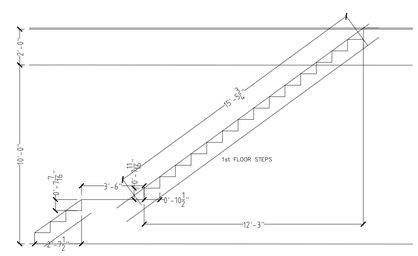

WINDOW SCHEDULE

QTY	LTR	SIZE	TYPE	DESCRIPTION	R.O.	REMARKS
9	A	6'0"x6'0"	DBL-HNG	Double Hung TWIN WINDOW		Double Window
1	B	3'0"x4'0"	DBL-HNG	Double Hung		SINGLE
1	C	3'0"x3'0"	DBL-HNG	Double Hung		SINGLE
	D					
3	E	3'0"x1'0	TOP TILT	Top Tilt Window		

DOOR SCHEDULE

QTY	LTR	SIZE	TYPE	DESCRIPTION	R.O.	REMARKS
	1	NOT USED		NOT USED		
1	2	5'0"x6'8"	EXT	FRONT ENTRANCE DOOR LH	3ft Door w 12" Side Lt	
4	3	5'0"x6'8"	EXT	5' PATIO DOOR BOTH SWING		
3	4	3'0"x6'8"	EXT	3' EXT Full Glass LH		
1	5	3'0"x6'8"	EXT	3' EXT Full Glass RHH		
1	6	3'0"x6'8"	INTERIOR	INTERIOR DOOR RH		
2	7	3'0"x6'8"	INTERIOR	INTERIOR DOOR LH		
1	8	2'6"x6'8"	INTERIOR	INTERIOR DOOR LH		
4	9	2'8"x6'8"	INTERIOR	INTERIOR DOOR LH		
3	10	2'8"x6'8"	INTERIOR	INTERIOR DOOR RH		
3	11	4'0"x6'8"	INTERIOR	INTERIOR DOOR BI-FOLD DOOR		

PROPER DECK BOARD SPACING

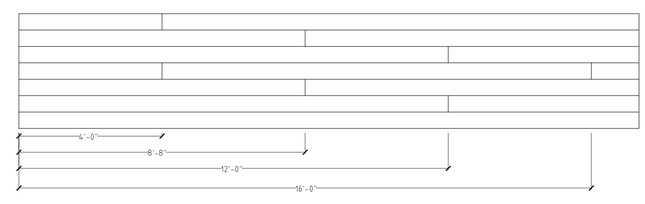

DECK BOARDS SHOULD BE JOINTED AT NO LESS THANK 48" SPACING AND NO BOARD SHOULD BE SHORTER THAN 36"

IMPROPER DECK BOARD SPACING

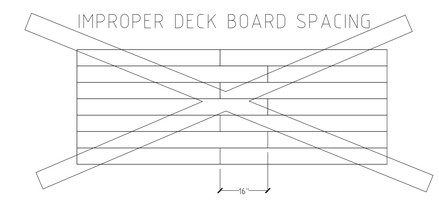

Elite One Builders LLC

423-736-0603

REV

Elite One Builders LLC

ADDRESS:

PAGE

F1.0