NOT TO SCALE FOR ILLUSTRATION ONLY

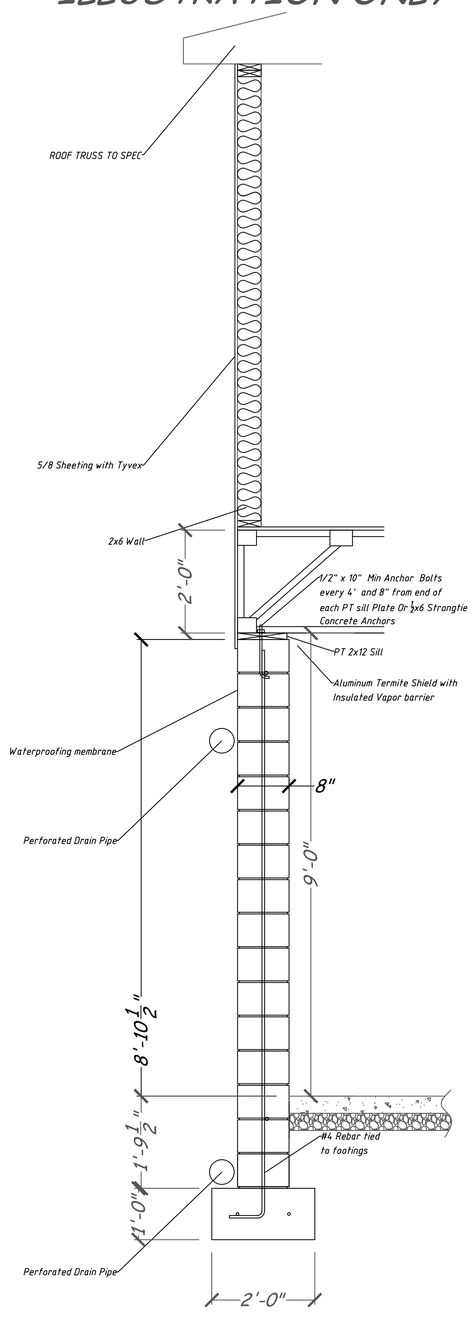

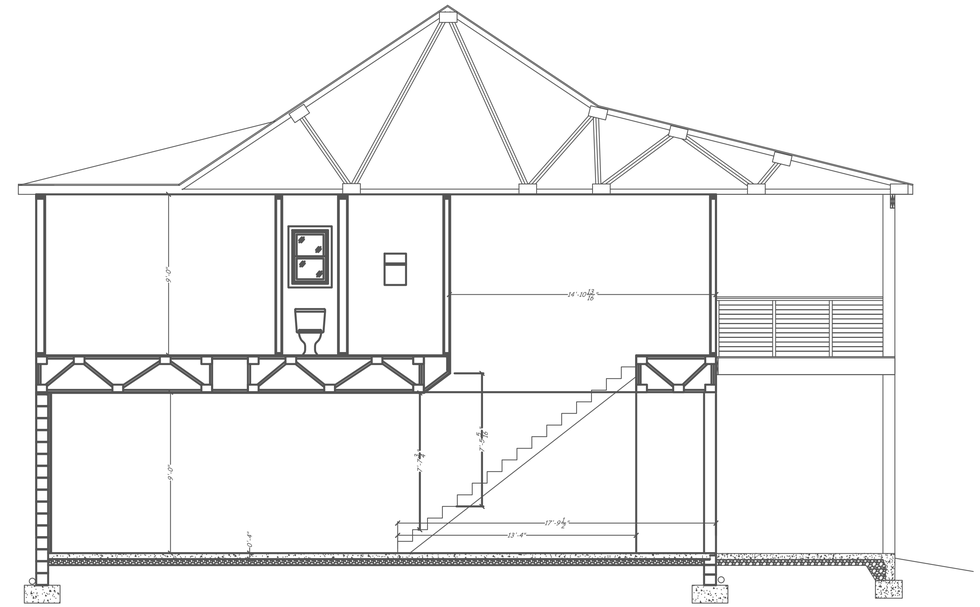

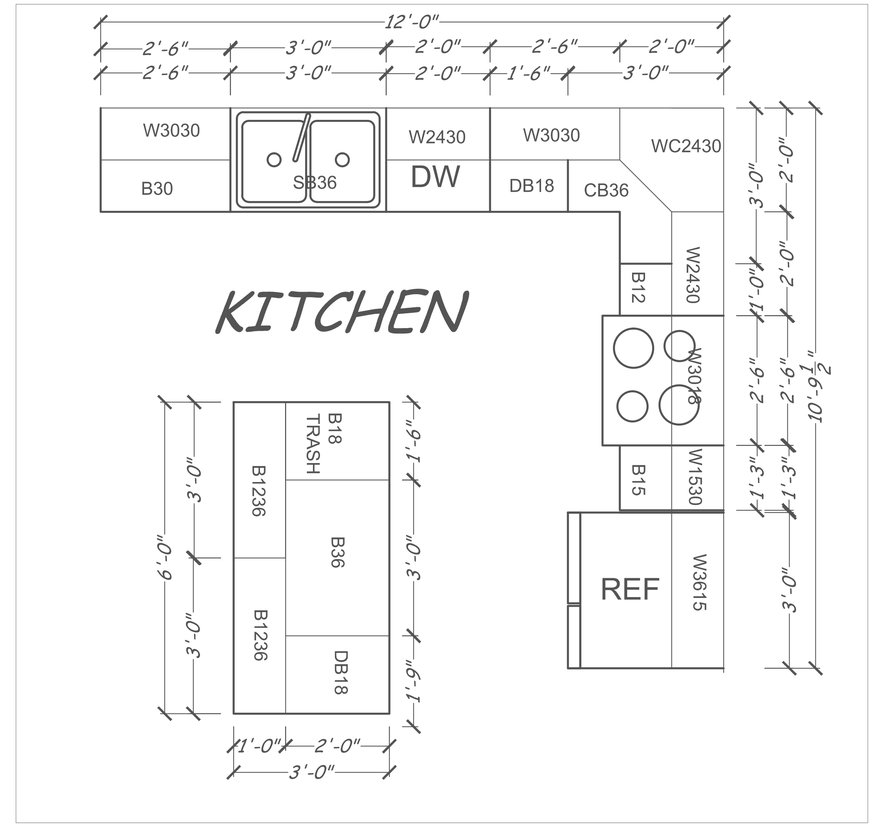

EOBLLC-FR
11-12-2025
REV Ver1.0

OSCAR GONZALEZ
931 SHERWOOD DR MORRISTOWN TN

PAGE
D!.0